American Mineralogist, Volume 73, pages 662–666, 1988

An improved Bond air mill for the preparation of spherical single crystals

ALEXANDER M. NITKIEWICZ
Department of Geosciences, The Pennsylvania State University, University Park, Pennsylvania 16802, U.S.A.
S. MICHAEL STERNER
Department of Geological Sciences, Virginia Polytechnic Institute and State University, Blacksburg, Virginia 24061, U.S.A.

ABSTRACT

A modified Bond-type air mill has been constructed by vacuum impregnating silicon carbide or alumina powders with epoxy resin to produce a composite material that greatly facilitates the manufacture of small single crystals for use in phase equilibria or diffraction studies. The new mill significantly reduces the failure rate when preparing spheres from fragile or easily cleaved materials. Spheres made with the new mill show less tendency to spall during hydrothermal experiments than those produced from Bond-type mills lined with tungsten carbide. Mills can be made with any size abrasive powder, thereby allowing the surface of the sphere to become highly polished. The mills are manufactured using readily available materials and require very little machining.

INTRODUCTION

Bond (1951) devised an air-driven mill to rapidly produce small (<1 mm) spherical single crystals for diffraction experiments. With the Bond mill, spheres are produced by using a stream of air to roll small mineral fragments rapidly around a cylindrical track lined with emery paper. Air enters through a small tangential hole in the track and exits through a mesh screen sandwiched between lucite plates that cap the ends of the mill. Spheres can be produced in a matter of minutes. Despite its many advantages, the Bond-type mill is better suited for manufacturing the very tiny spheres used in diffraction experiments than the larger spheres needed in phase-equilibrium studies. The emery paper does not last long enough to mill a large sphere, and the lucite end caps are easily worn down, generating large ruts that keep the spheres from full contact with the abrasive.

In the late 1960s, D. K. Smith replaced the emery paper in the Bond mill with a tungsten carbide insert to give it a durable, permanent grinding surface. Slaughter et al. (1975) utilized Smith's mill to manufacture spherical single crystals for use as reaction monitors in hydrothermal experiments. Because the spheres were free of geometrical irregularities that might break off and generate spurious weight changes, they could be used with more confidence to measure very limited extents of reaction. Although single crystals had been used in hydrothermal studies since the 1940s (Kennedy, 1944), the Bond mill provided the first *convenient* way to produce geometrically smooth crystals. This was a significant improvement over the hand-ground cylindrical crystals used by Fyfe and others since the 1960s (e.g., Weill and Fyfe, 1964; Evans, 1965) and eventually led to more widespread use of single crystals as high-precision reaction monitors.

Unfortunately, the use of the modified mills was an imperfect solution because brittle materials were easily damaged by high-velocity impacts with the tungsten carbide. This was particularly true during the early stages of milling when the mineral fragments were too irregular to roll smoothly along the track. Consequently, the modified mills resulted in a relatively high failure rate, especially for materials with prominent cleavage. Commonly, single-crystal spheres made from such materials (e.g., andalusite) were sufficiently strained during milling that they tended to fracture or spall during the course of hydrothermal experiments, thereby negating the results. As a solution to this problem, this paper describes a new variation of the Bond sphere mill that employs an epoxy-abrasive composite material that is gentler on the crystals, thereby facilitating the manufacture of spherical reaction monitors that are less subject to failure during hydrothermal experiments. The new mills are more efficient because the end caps are made of abrasive material rather than lucite and are thus able to produce better-shaped spheres from highly anisotropic materials. Additionally, the composite mills allow surface texture to be varied, an important development considering the observation by Wood and Walther (1983) that the surface area of single-crystal reaction monitors is the major rate-limiting feature controlling kinetics in hydrothermal studies.

DESIGN AND MANUFACTURE

The basic design of the new mill is shown in Figure 1. The mills are made from a composite material produced by vacuum-impregnating silicon carbide or alumina grinding powders with fiberglass epoxy. The main body and end caps of the mill are cast by filling two cylindrical containers with a slurry consisting of fiberglass epoxy and grinding powder. Aluminum beverage cans make excellent molds because the thin aluminum is very easily peeled

0003–004X/88/0506–0662$02.00

away after curing. The central portion of the main body mold must remain hollow in order to form the grinding track of the mill (see Fig. 1). Thus, prior to filling the molds, a long, thin-walled glass tube approximately 2 cm in diameter is anchored in one of the cans using a small amount of epoxy that is allowed to harden sufficiently to keep the tube centered. No glass tube is required for the mold that will generate the solid cylinder from which the end caps are cut.

The slurry is made by gently stirring a 3:2 volume mixture of grit to epoxy. The exact ratio is dependent upon the mesh of the powder and the viscosity of the epoxy, but in general it is best to keep this ratio as high as possible in order to generate a self-supporting framework of grit. Too little grit reduces the grinding efficiency of the mills, but too much results in poor impregnation and large voids. The cured epoxy should be harder and more brittle than standard petrographic epoxies because it must not only bind the grit but it should also chip away during impacts that would otherwise be intense enough to damage the crystals. Marine fiberglass epoxies satisfy these criteria and are relatively inexpensive and readily available.

Enough slurry is added to each model to fill it to approximately one-third of capacity. None of the slurry is allowed to enter the interior of the glass tube, since the surface it generates will eventually become the milling track. The containers are then placed under vacuum to remove bubbles left from stirring the epoxy-grit mixture. Because the slurry can more than double its volume while degassing under vacuum, the containers must be underfilled to prevent the bubbling froth from spilling over. After the initial froth begins to collapse, the vacuum is released. This process will remove most of the air bubbles, but if any air remains, the procedure should be repeated. Because the epoxy tends to boil under vacuum, the degassing may appear to be incomplete, but the vacuum should not be prolonged after the collapse of the froth because this can change the characteristics of the epoxy.

If a strong vacuum source (~0.01 torr) is available, better results can be achieved by impregnating the epoxy into the abrasive rather than using a pre-mixed slurry. With this technique, the containers are tightly packed with grinding powder and freshly mixed epoxy is poured over the grit. The containers are then placed under a strong vacuum to degas the epoxy and the vacuum is released, forcing the resin into the interstices of the packed powder. In order to insure that the powder is uniformly impregnated, it is essential that the epoxy be very fluid. This technique works best for abrasives coarser than 400 mesh and is most successful when the vertical height of the material to be impregnated is less than 5 cm. When successful, the resultant composite makes a superior grinding surface because it has the highest ratio of grit to epoxy.

After the materials are cured, the molds are peeled away. Wafers approximately 3 mm thick are cut from the solid cylinder to serve as the end caps for the mill. Similarly,

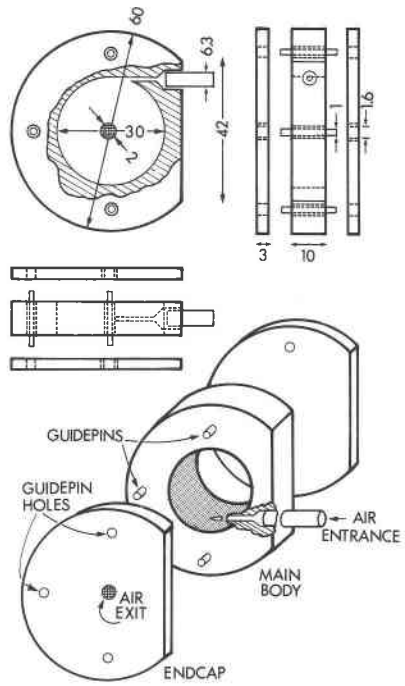

Fig. 1. Design specifications of the new mill. All dimensions noted are in mm. The mill consists of a hollow central cylinder and two endcaps. The forced air which drives the mill enters through a short length (~25–50 mm) of copper tubing [6.3 mm (¼ in.) outside diameter] attached to an opening on one side of the mill. This opening constricts down to 1 mm (or less) and extends *tangentially* to the mill's inner cylindrical wall which should be at least 2 cm in diameter. One or both of the endcaps contains a small central opening (1–2 mm diameter) where air exits from the mill. To prevent small spheres from exiting the mill, a 400-mesh TEM grid is glued over the air vent(s). The endcaps are positioned by three small guide pins on each side of the mill, and the assembled unit is held together with a strong rubber band.

the hollow cylinder cast is cut into 1 cm wide units to form the central elements of the mills. The remaining glass tube must be chipped away to expose the grinding surface. Saw marks should be ground from both the end caps and the body of the mills to ensure a reasonably airtight fit when the mills are assembled.

A complete mill assembly consisting of the hollow body and two end caps is then clamped together in preparation for machining. Three small holes [1.6 mm (1/16 in.) diameter] for the guidepins are drilled through this assembly (see Fig. 1). The guidepins, 1.5 cm in length, are cut from large paper clips and cemented in place in the main body such that they protrude an equal distance on either side. A single hole (~2 mm in diameter) is drilled through one or both of the end caps to serve as vents for the air that drives the mill. A 400-mesh TEM grid glued over the *inside* of the vent(s) suffices to keep spheres as small as 40 μm from exiting the mill.

To facilitate further cutting and machining, a flat surface approximately 42 mm long is cut across the circum-

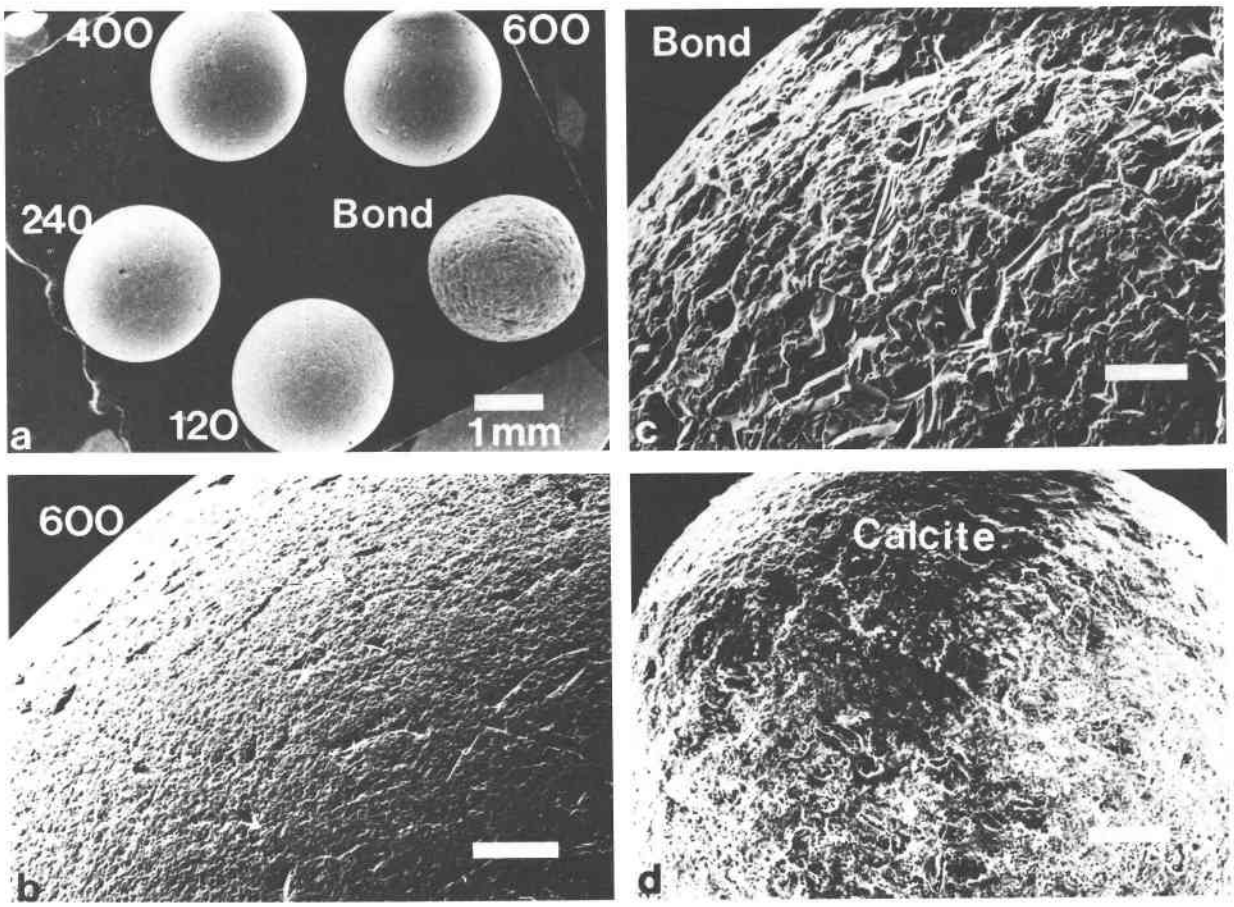

Fig. 2. (a) SEM photo comparing quartz spheres manufactured using a Bond air mill with tungsten carbide insert versus the 120-, 240-, 400- and 600-mesh composite mills. The average diameter of the spheres is 2.3 mm. (b) SEM photo of quartz sphere manufactured using 600-mesh alumina composite mill. The scale bars in photos b–d are 100 μm. (c) SEM photo of quartz sphere manufactured using Bond air mill with tungsten carbide insert. (d) Calcite milled using the 120-mesh SiC composite mill. The diameter of the spheroid is about 0.9 mm.

ference of the assembled mill (see Fig. 1). The air entrance is created by drilling a 1-mm hole through this flat surface into the hollow core of the mill. To ensure proper airflow, the outer edge of the air entrance tube must be tangential to the grinding track. The outermost portion of the entrance port is then widened to accommodate a short length of 6.3 mm (¼ in.) copper tubing onto which the incoming air hose is attached, and this tube is then cemented in place. Rubber bands are used to hold the end caps in position during operation of the mill. The use of guidepins and rubberbands instead of bolts allows for quicker assembly and disassembly of the mill. This is important because, unlike the Bond mill, the end caps are not transparent so the mill must be disassembled to check the progress of the spheres.

Operation

The mill operates by rolling small mineral fragments around its interior wall, gradually abrading corners and rough edges to form nearly spherical crystals. This is accomplished by using a steady stream of compressed air to push the fragments around the grinding track. The compressed air used to drive the mills must be filtered to remove oil from the line. Oil must be removed from the air because it will lubricate the milling surface and inhibit the grinding process. Any number of mills can be driven at once by simply bifurcating the airline downstream from the oil filter. To prevent excessive and potentially harmful dust from escaping during milling, the mills are placed in a glass beaker that is covered by a damp cloth.

Initial rounding of the spheres is best accomplished in mills made from the coarsest abrasive available (e.g., 120-mesh SiC). Once the crystals have become spheroidal, progressively finer grit mills can be used to finish the surface to the desired polish. The best success is achieved by milling spheres individually, but for some materials (e.g., quartz), satisfactory results may be realized with up to six spheres in a single mill. Selection of the air speed necessary to achieve the optimum milling rate is critical because excessive revolutions per minute (RPM) can

quickly damage or destroy a sphere. Proper air speed must be determined by trial and error since it depends upon a number of factors including the exact dimensions of the mill, durability of the material, number of spheres being milled together, and quality of the desired surface polish. With some experience, the desired RPM is easily gauged by ear. Milling times vary, but several hours to a day are sometimes necessary when low air speeds must be used to achieve strain-free crystals.

If sufficient grit has been utilized in manufacturing the mill, the composite consists of a self-supporting grit framework held together by a minimal amount of interstitial epoxy. Such mills work well because grit is easily dislodged during strong impacts, exposing fresh grit. The mill therefore has a finite lifetime since it wears down with use. Those mills used for the initial rounding wear out most quickly, since high-energy impacts are common when the crystals are too irregular to roll smoothly along the grinding surface. The 120-mesh silicon carbide mills that we have used have useful lifetimes of several hundred hours. This corresponds to approximately 30–40 1.5-mm quartz spheres milled from 3-mm cubes. Mills not used for the initial rounding last significantly longer.

Failure to utilize enough grit in the epoxy slurry will result in mills that perform poorly because of the reduced number of abrasive particles per unit area on the milling surface. Furthermore, if the grit network is not self-supporting, high-energy impacts during the early stages of milling tend to drive the grit into the epoxy matrix, thereby reducing the grinding efficiency of the mill. Mills that exhibit slow grinding times can be temporarily reconditioned by scraping the interior walls of the mill.

Discussion

A series of quartz spheres manufactured with the epoxy-grit composite mills are shown in Figure 2a. The spheres were milled one at a time from 3-mm Brazilian quartz cubes that had been cut with a Buehler Isomet trim saw. Each sphere was initially rounded in the 120-mesh SiC mill. They were then ground for an additional hour in mills made from progressively finer alumina grinding powders. The spheres are labeled by the mesh size of the finest mill in which they were ground. The sphere labeled "Bond" was produced in a tungsten carbide-lined Bond mill and is shown for comparison.

One of the new mill's major advantages is its ability to work easily damaged materials because the high-energy impacts that characterize the early stages of milling dislodge grit from the mill wall and thus reduce damage to the sphere itself. The gentle nature of the mill's abrasion allows the surfaces of the quartz spheres to be considerably smoother than those prepared using a tungsten carbide Bond mill (see Figs. 2a, 2b, 2c). Even for the large spheres typical of hydrothermal experiments, a nearly polished surface can be attained by using mills made from progressively finer grinding powders. Although the spheres from the 600-mesh mill appear well-polished to the naked eye, small remnants of fracture pits formed during the early stages of rounding persist (see Fig. 2b). Fortunately, these fracture pits may be minimized by slowing the air speed of the mill, and since they are small, they are relatively stable and do not tend to spall further during hydrothermal experiments.

The new mills produce better-shaped quartz spheres than the Bond mill (see Fig. 2a). This is due in part to the use of abrasive end caps. Once a crystal has become rounded enough to roll smoothly, any anisotropy that begins to develop causes a crystal to orient itself as it moves along the milling track. This tends to further enhance the anisotropy because only that portion of the crystal making contact with the grinding surface will abrade. Since spheres tend to roll along the edges of the grinding track, the lucite end caps of the Bond-type mills become deeply rutted with prolonged use, further aggravating the problem. By making the end caps of the same abrasive material as the main body of the mill, an additional grinding surface is in contact with the crystals. Consequently, the new mills tend to counteract any shape anisotropy, producing better-shaped spheres even out of difficult materials. The most easily rounded phases are those with poor cleavage (such as quartz); however, the combined action of the abrasive end caps and the gentle abrasion of the epoxy-grit composite allows even easily cleaved materials like calcite (Fig. 2d) to be made nearly spherical if the original material is relatively equant and low air speeds are used.

The smallest sphere that we have manufactured in the new air mill was about 150 μm in diameter, but with care, the preparation of considerably smaller spheres is highly feasible. The recovery of very tiny spheres is facilitated because electrostatic charge tends to hold the sphere very strongly on the grinding track, thereby making it hard to lose the sphere while disassembling the mill. However, since spheres spin more rapidly about their own axes as they decrease in size, increasing centrifugal forces can destroy very small spheres (Bond, 1951). To prevent this, air speed must be gradually decreased during the final stages of milling. Small spheres benefit from the good polish attainable with the new mills because the coarse surface topography generated by older versions of the mills (see Fig. 2c) can become significant as the sphere size decreases. Such ultrasmall spheres (<50 μm) are of great interest because they permit the geometry of point-to-point contacts to be easily controlled, thereby allowing pressure-solution phenomena to be better quantified. Small spheres may also be of use in isotopic zoning studies since it should be possible to mill tiny grains of zircon, garnet, or other phases to incrementally expose the interiors of these grains.

Acknowledgments

This research was supported in part by NSF grant EAR-8307682 to Derrill M. Kerrick. We gratefully acknowledge Deane Smith for his advice concerning the manufacture of small spheres for diffraction studies and Derrill Kerrick for his early review of the manuscript. Discussions with Ken Applin, James Meen, and Susan Brantley resulted in novel applica-

tions of the spheres to problems in petrology. Special thanks are extended to Allen Edgar, Bernard Evans, and J. A. Speer for their thoughtful comments during review.

References cited

Bond, W.L. (1951) Making of small spheres. Review of Scientific Instruments, 52, 344–345.

Evans, B.W. (1965) Applications of a reaction-rate method to the breakdown equilibria of muscovite and muscovite + quartz. American Journal of Science, 263, 647–667.

Kennedy, G.C. (1944) The hydrothermal solubility of silica. Economic Geology, 45, 629–653.

Slaughter, J., Kerrick, D.M., and Wall, V.J. (1975) Experimental and thermodynamic study of equilibria in the system CaO-MgO-SiO_2-H_2O. American Journal of Science, 263, 647–667.

Weill, D.F., and Fyfe, W.S. (1964) The solubility of quartz in H_2O in the range 1000–4000 bars and 400–550 °C. Geochimica et Cosmochimica Acta, 28, 1243–1255.

Wood, B., and Walther, J.V. (1983) Rates of hydrothermal reactions Science, 222, 413–415.

Manuscript received February 5, 1987
Manuscript accepted January 20, 1988

American Mineralogist, Volume 73, pages 666–667, 1988

NEW MINERAL NAMES

John L. Jambor
CANMET, 555 Booth Street, Ottawa, Ontario K1A 0G1, Canada

New Data

Arseniopleite

P.J. Dunn, D.R. Peacor (1987) New data on the relation between caryinite and arseniopleite. Mineral. Mag., 51, 281–284.

Electron-microprobe analysis of arseniopleite from Långban, Sweden, gave the following composition for a single sample and (range) for additional samples: Fe_2O_3 0.5(0.0–0.5), MgO 7.1(7.1–8.0), CaO 7.4(7.4–7.7), MnO 20.1(20.1–21.5), PbO 8.7(3.5–8.7), BaO 0.3(0.0–3.7), P_2O_5 0.5(n.d.), As_2O_5 50.6(50.6–52.4), Na_2O 5.0(4.8–5.0), sum 100.2 wt%. The Fe_2O_3 is total Fe; microchemical tests gave a strong to moderate positive reaction for Fe^{3+}. The analyses are considered to correspond to the ideal formula $Na_4Ca_4Mn_4(Mn,Mg)_8(AsO_4)_{12}$ based on 48 oxygen atoms and by analogy with alluaudite structural requirements. Single-crystal Weissenberg study indicates that arseniopleite is isostructural with alluaudite. Significant differences in intensity and spacings of some reflections with large *d* values were observed between powder and single-crystal photographs of arseniopleite and caryinite, especially for 020 and 110. The differences are attributed to solid-solution variations, and it is suggested that arseniopleite may have Mn dominant in the *M*(1) site whereas caryinite has (Ca,Mn). Provisional retention of the name arseniopleite is suggested, either until additional studies are done or until nomenclature decisions are made for alluaudite-type structures. **J.L.J.**

Bonchevite

W.D. Birch, W.G. Mumme (1985) Pekoite from Narechen, Bulgaria—A possible solution to the bonchevite problem. Mineral. Mag., 49, 135–137.

Scheelite-bearing quartz veins near the town of Narechen, southern Rhodope Mountains of Bulgaria, were the original source of bonchevite which was assigned the formula $PbBi_4S_7$ when the mineral was described and named by Kostov (*Mineral. Mag.*, 31, 821–828; 1958). Examination of new specimens collected near Narechen has shown that the sulfosalt they contain is pekoite of variable composition. It is suggested that the X-ray and chemical data used for the original description of bonchevite were obtained from a mixture of galenobismutite and partly (Cu,Pb)-substituted bismuthinite (namely pekoite as it is now known).

Discussion. X-ray powder patterns, single-crystal studies, and electron-microprobe analyses obtained by this reviewer in 1967 on type-locality specimens, kindly provided by Kostov, gave results in total accord with the above suggestion. **J.L.J.**

Caryinite

P.J. Dunn, D.R. Peacor (1987) New data on the relation between caryinite and arseniopleite. Mineral. Mag., 51, 281–284.

Caryinite, known only from Långban, Sweden, was found to have the following composition for a single sample and (range)

0003–004X/88/0506–0666$02.00